Steps to Build a Water Quality Monitoring System Using Open-Source Components (Components BOM.xlsx).

This is the final system, a low-cost, open-source water quality monitoring platform that combines sensors, including pH, DO (dissolved oxygen), EC (electrical conductivity), ORP (oxidation-reduction potential), temperature, and turbidity, with a microcontroller, cloud boards, and a communication module to collect high-frequency, real-time measurements. All components in the bill of materials connect to form a continuous pipeline: sensors feed data to the controller, which performs basic processing, logging, and transmission to a local or cloud dashboard for visualization. Together, this creates a modular and extensible setup that can be replicated or integrated with control strategies, such as feed, aeration, and purge routines.

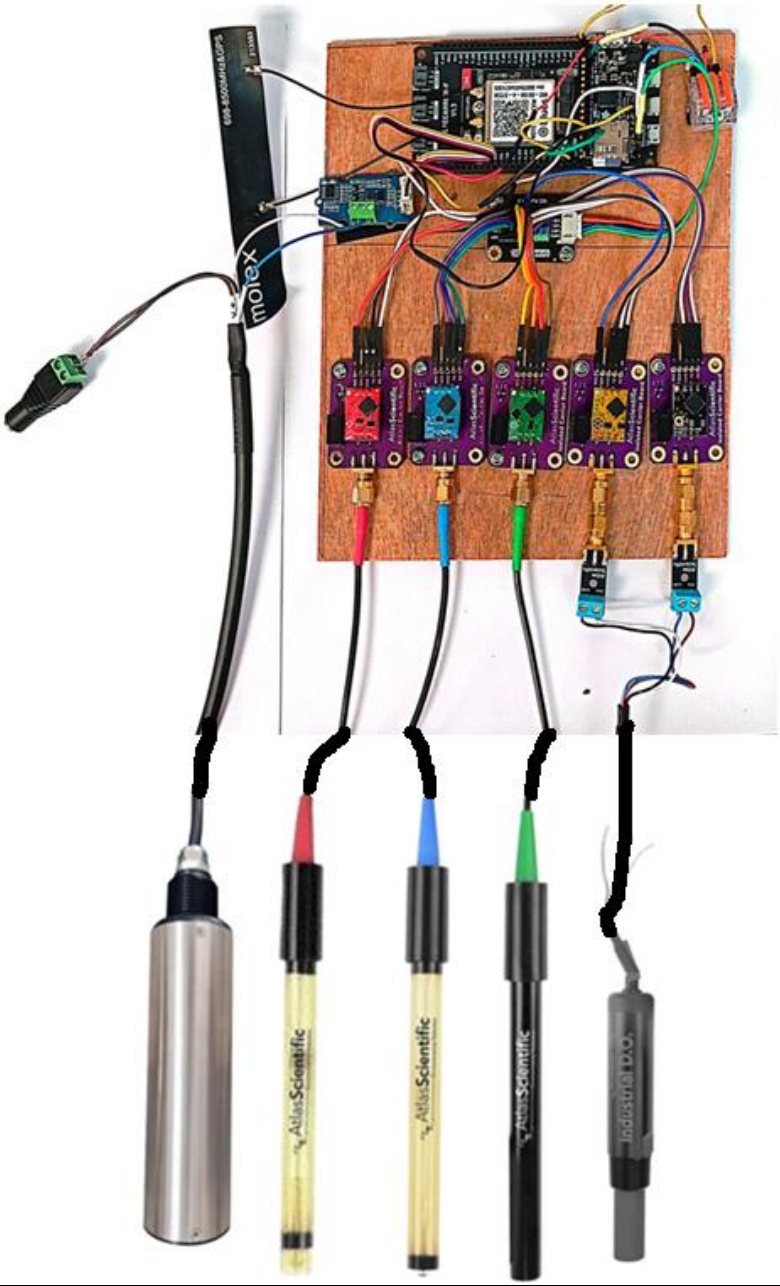

1. Sensor components
   - Atlas sensor

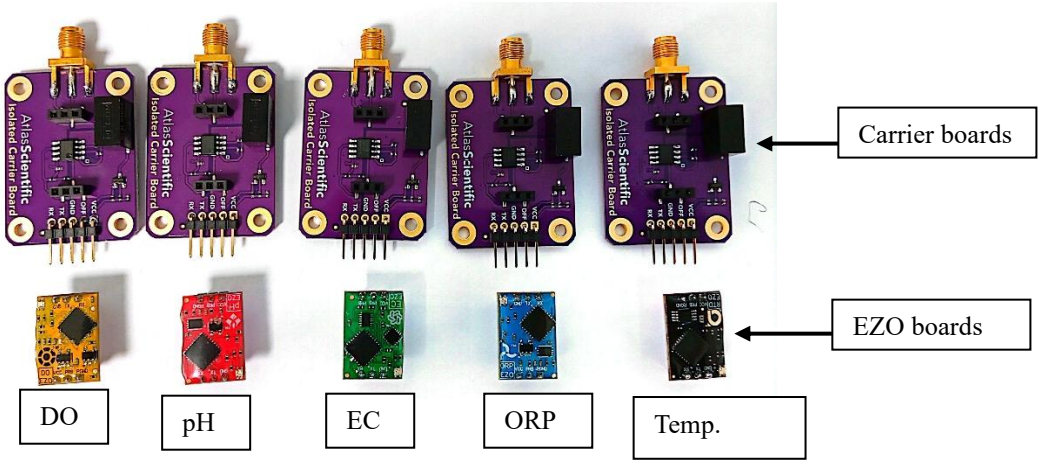

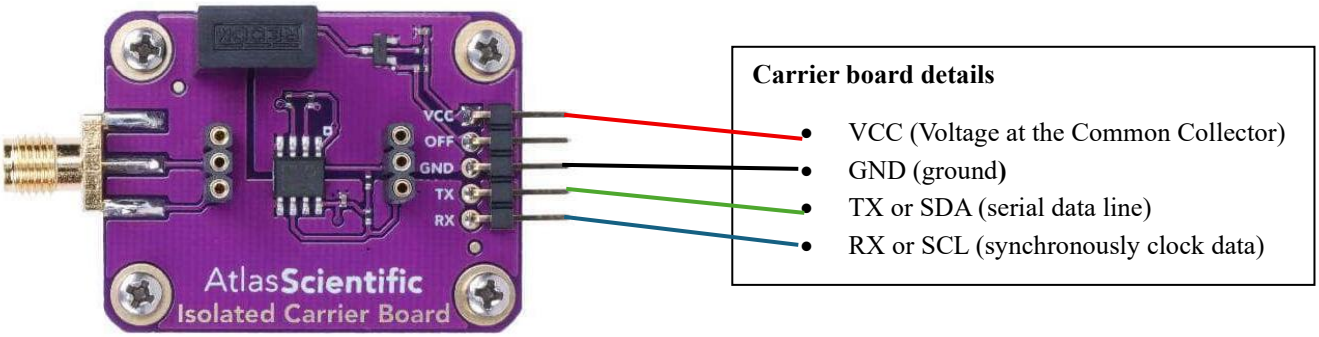

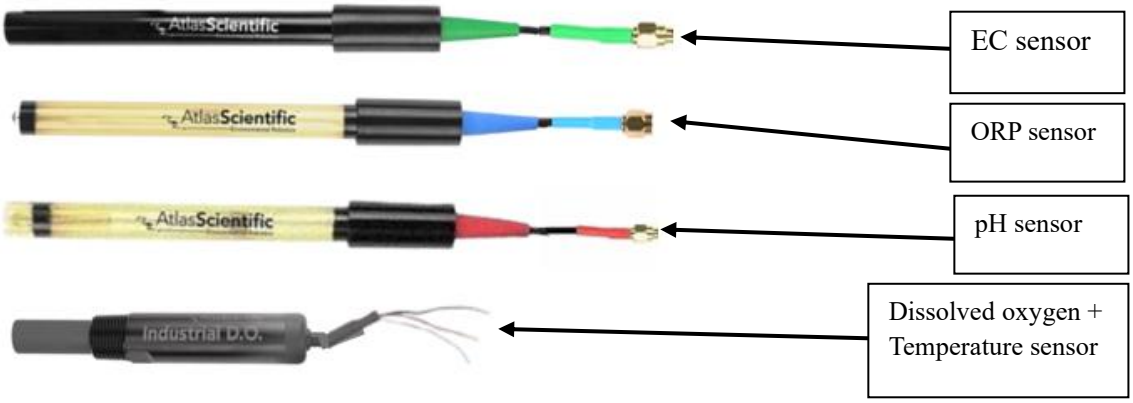

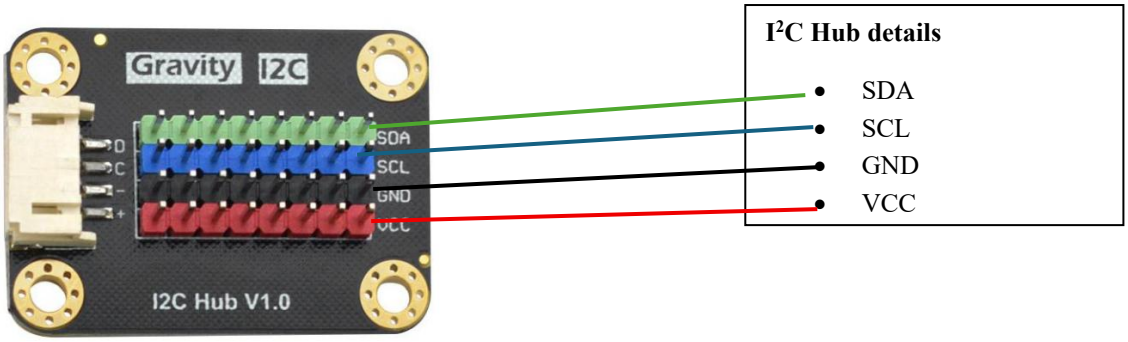

- Turbidity sensor component

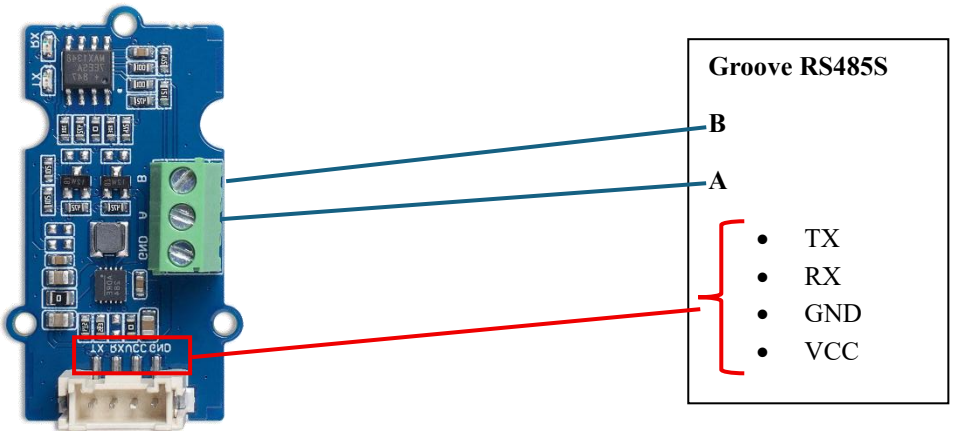

- Components for cloud communication

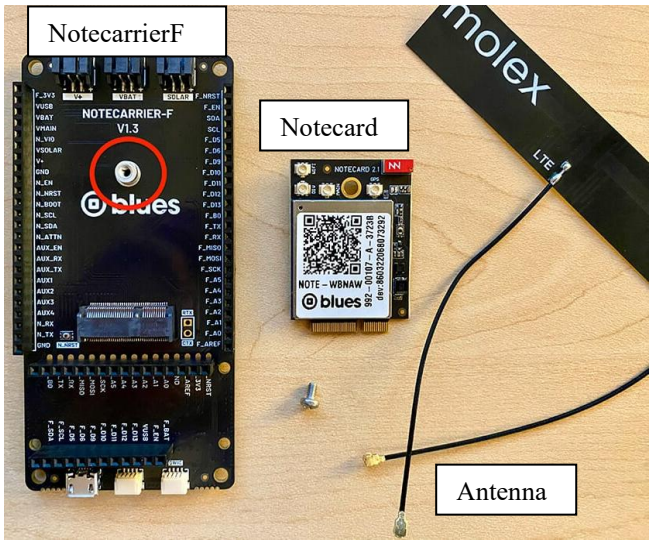

2. Connection

Step 1: Seat each Atlas EZO on its matching carrier, align the pin labels, press straight down, and set the I²C mode if the carrier has a switch. Verify that no pins are bent.

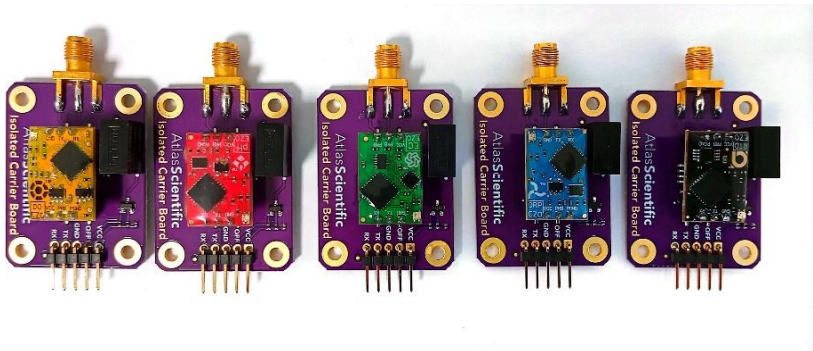

Step 2: Connect their respective wires to the carrier board. VCC→VCC; GND→GND; SDA→SDA; SCL→SCL.

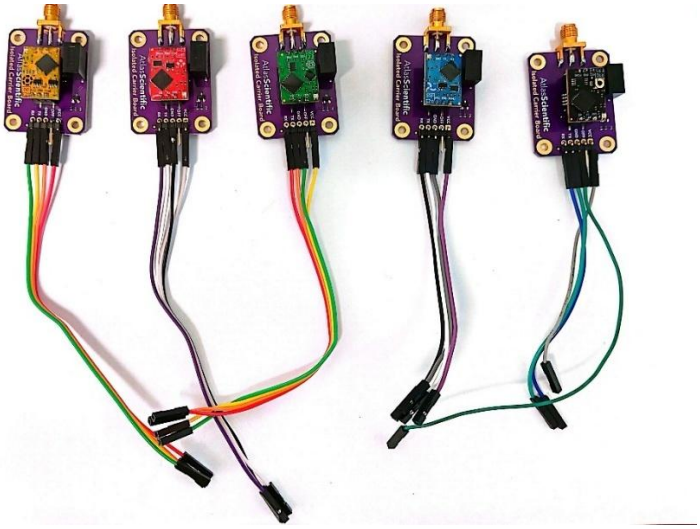

Step 3: Wire each carrier to the I²C hub: VCC to VCC, GND to GND, SCL to SCL, and SDA to SDA.

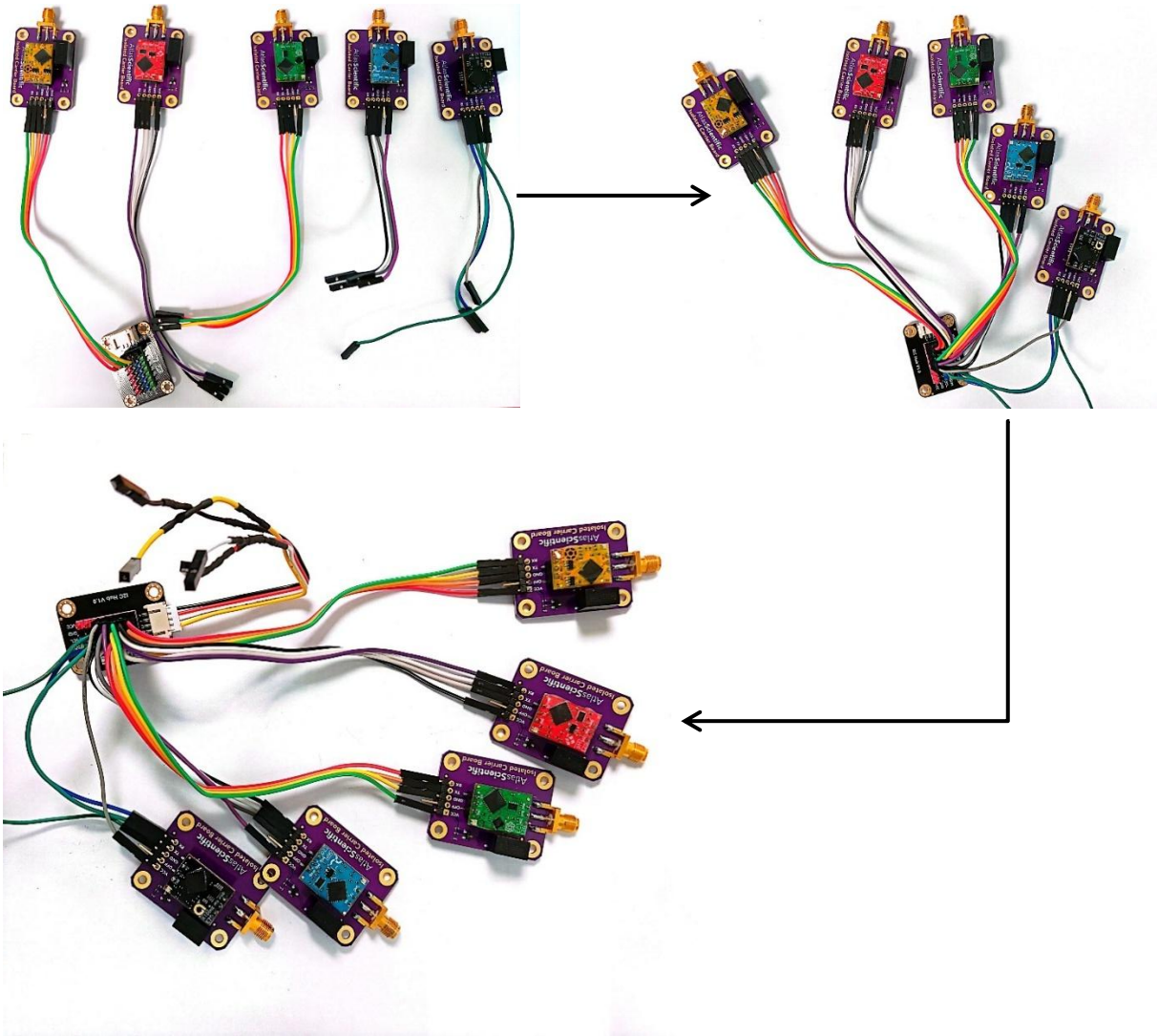

Step 4: Connect the I²C hub to the Feather M0: VCC→VCC, GND→GND, SDA→SDA, SCL→SCL.

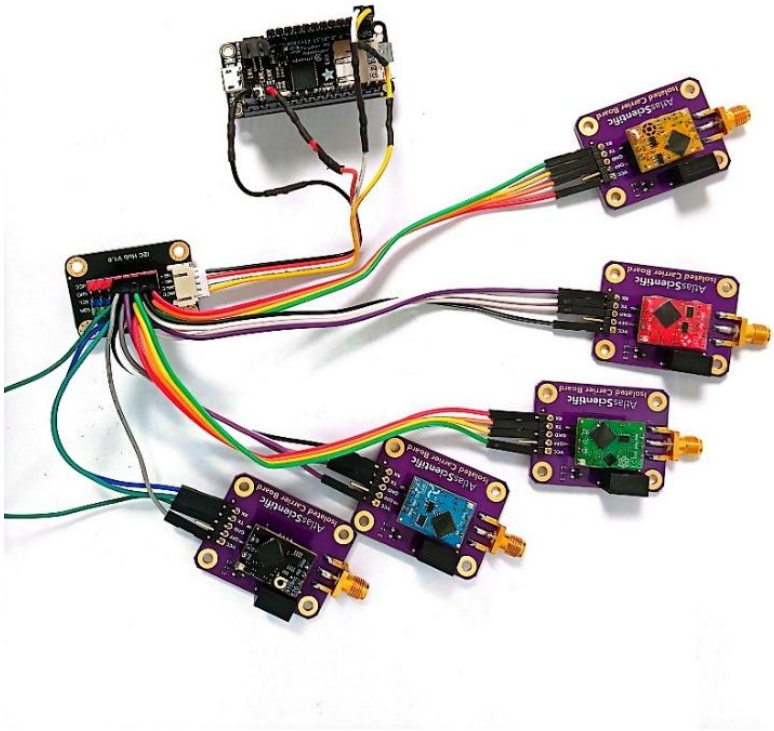

Step 5: Connect the turbidity probe's RS-485 A/B to a 3.3 V RS-485 transceiver A/B, wire the transceiver to the Feather M0 (TX→ pin 10 (D10), RX→D11, VCC→3.3 V, GND→GND), and power the probe from 12 V with a common ground.

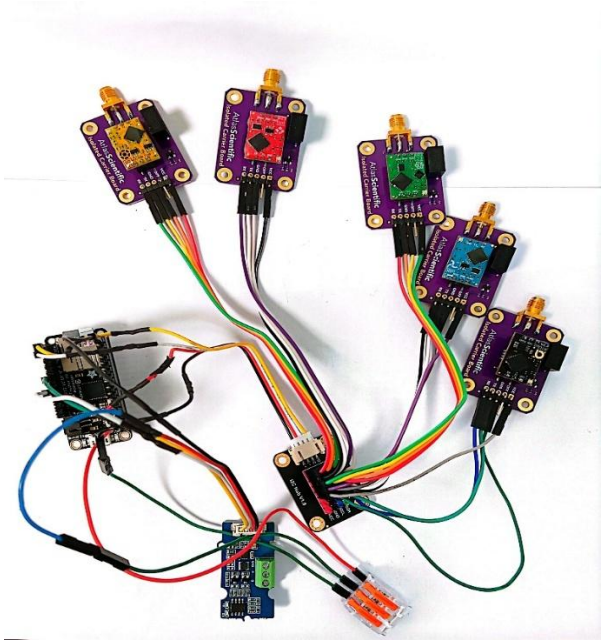

Step 6: Mount the Notecard onto the Notecarrier-F, secure it with screws, then attach the antenna to the Notecard.

Step 7: Stack the Feather M0 onto the Notecarrier-F; ~~the header stack provides power and I²C.~~

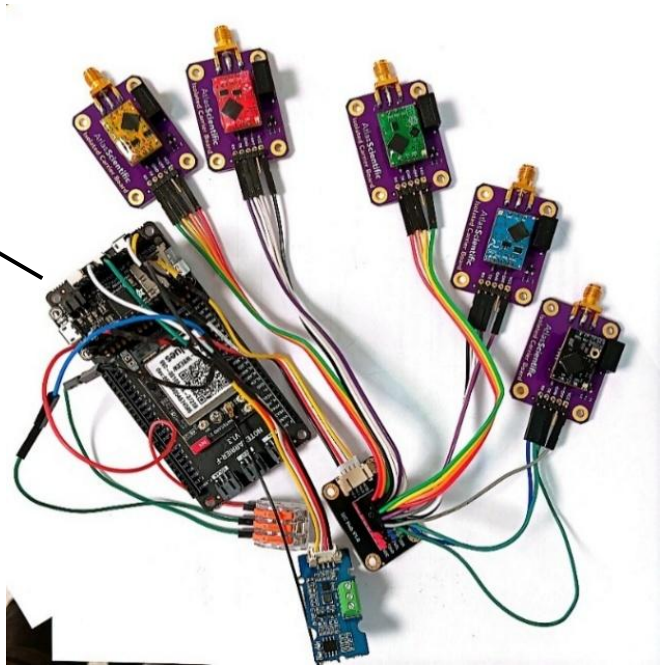
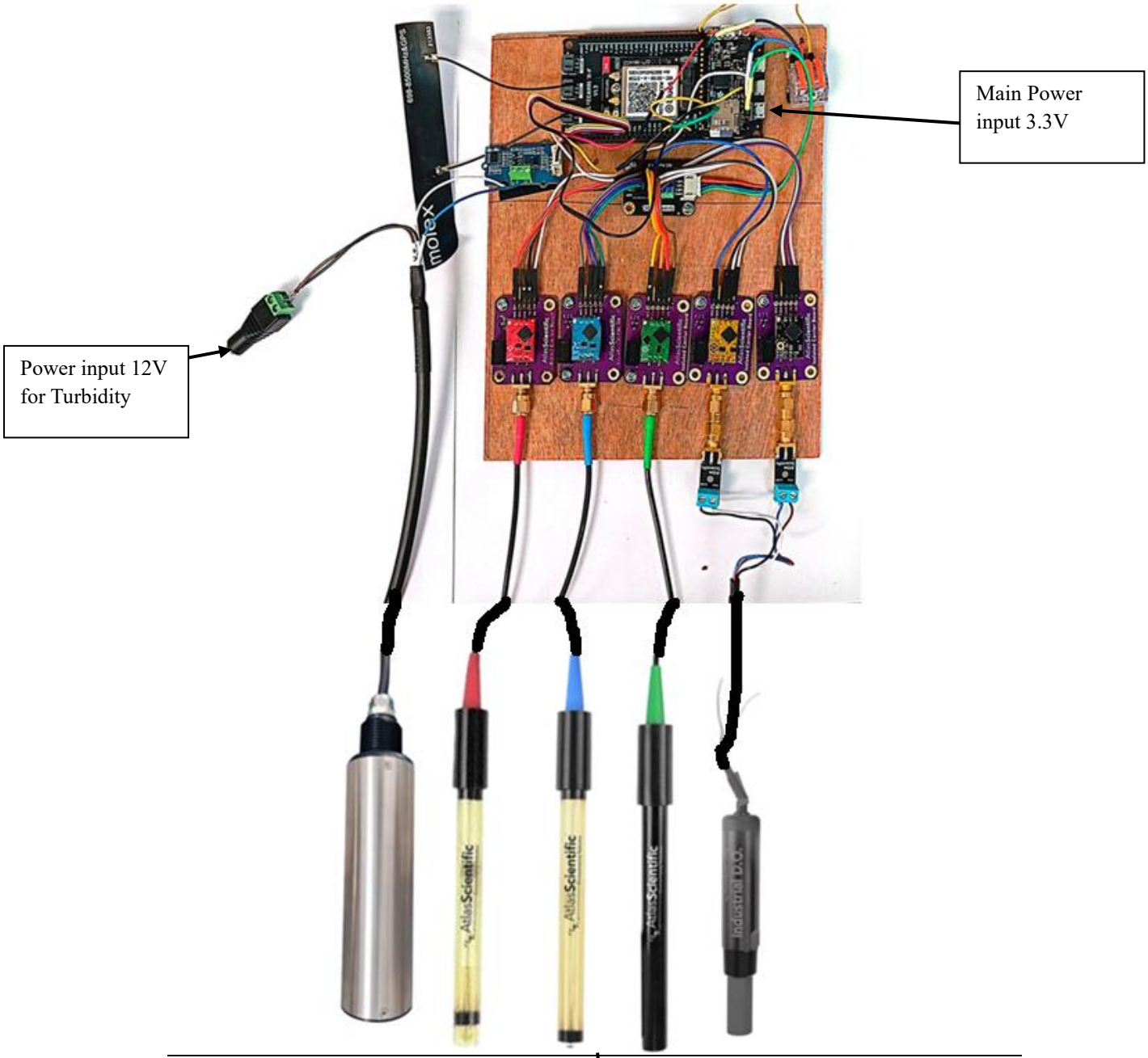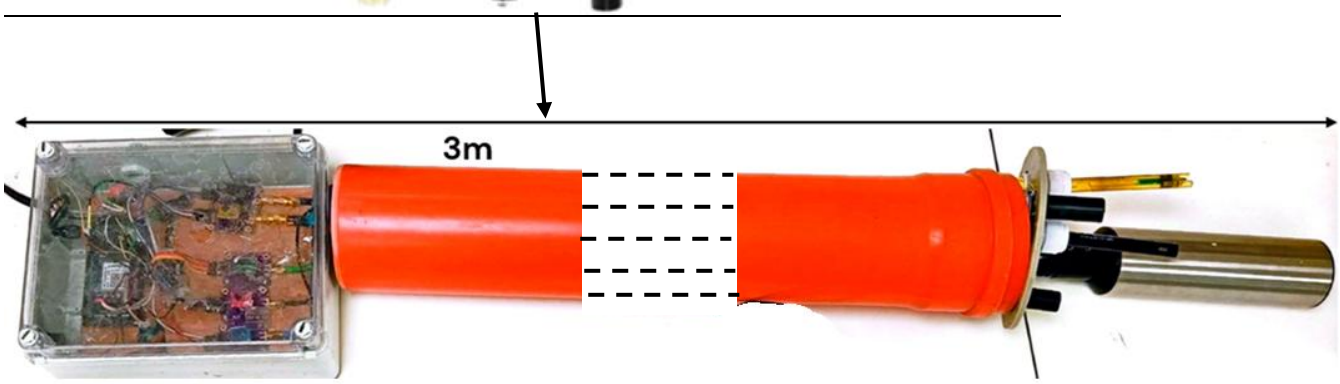
Step 8: Plug each Atlas probe into its matching EZO carrier. For turbidity, wire A to A and B to B to the RS-485 transceiver. Power the probe from 12 V via the DC screw terminal (V+ and GND) and share a common ground with the system.